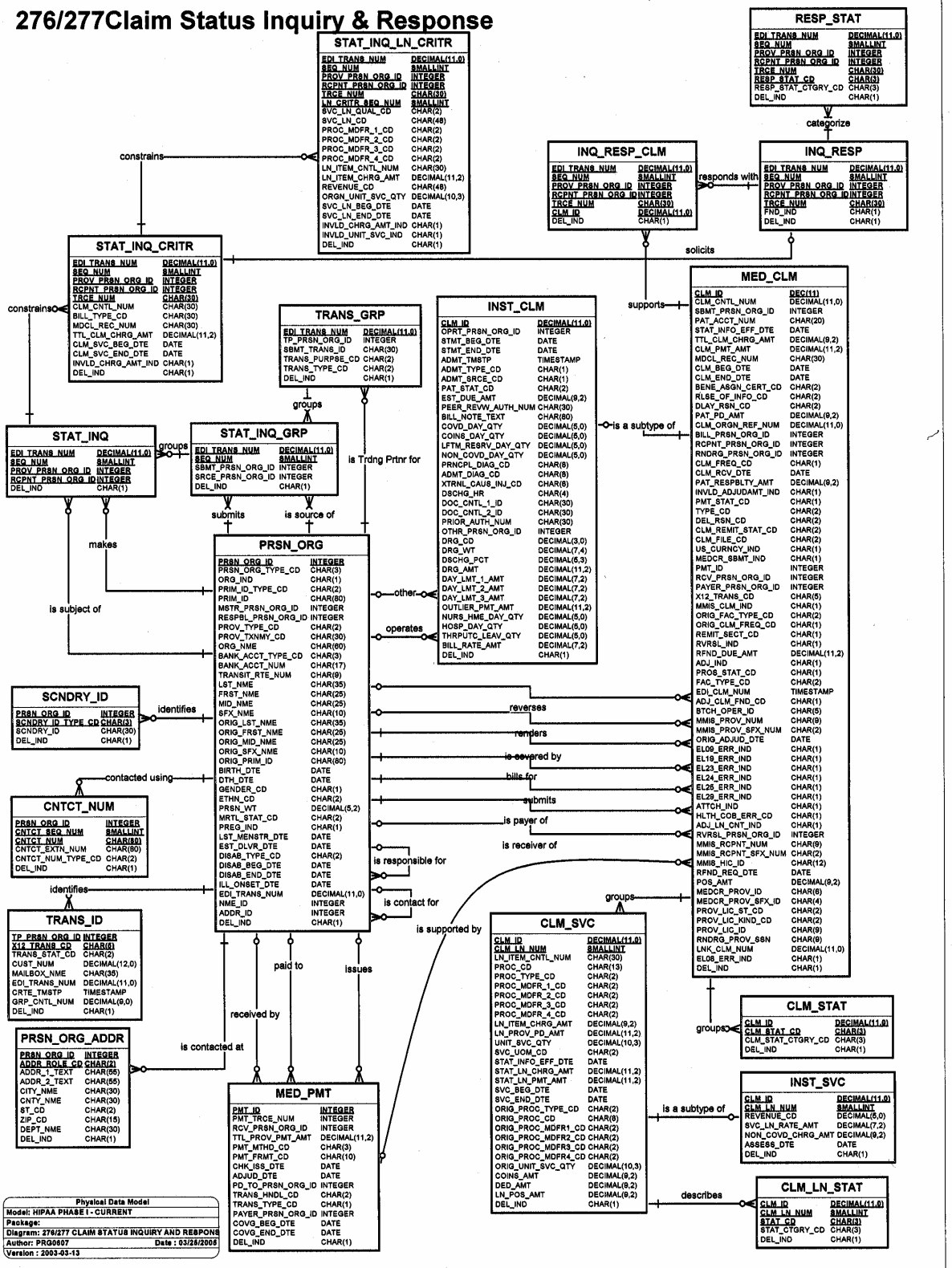276/277Claim Status Inquiry & Response